Parts List				
ITEM	QTY	PART No.	DESCRIPTION	MATERIAL
1	2	BB4956	2-Way Check Valve 20k Long-term MP 9/16"- 2,0-0,5 Bar FM-M	Super Duplex/Inconel
2	1	BA6310	Adapter Plate for Lock Interface Ø43 Long-term	S32760 SUPER DUPLEX
3	1	BA6309	Adapter Plate wLock Interface Ø43 Long-term	S32760 SUPER DUPLEX
4	1	BA5926	Ø43 DP Rec 20k Long-term MP 9/16"	S32750 SUPER DUPLEX
5	4	100594	M10x30 Socked Head Bolt DIN 912 A4-80	A4

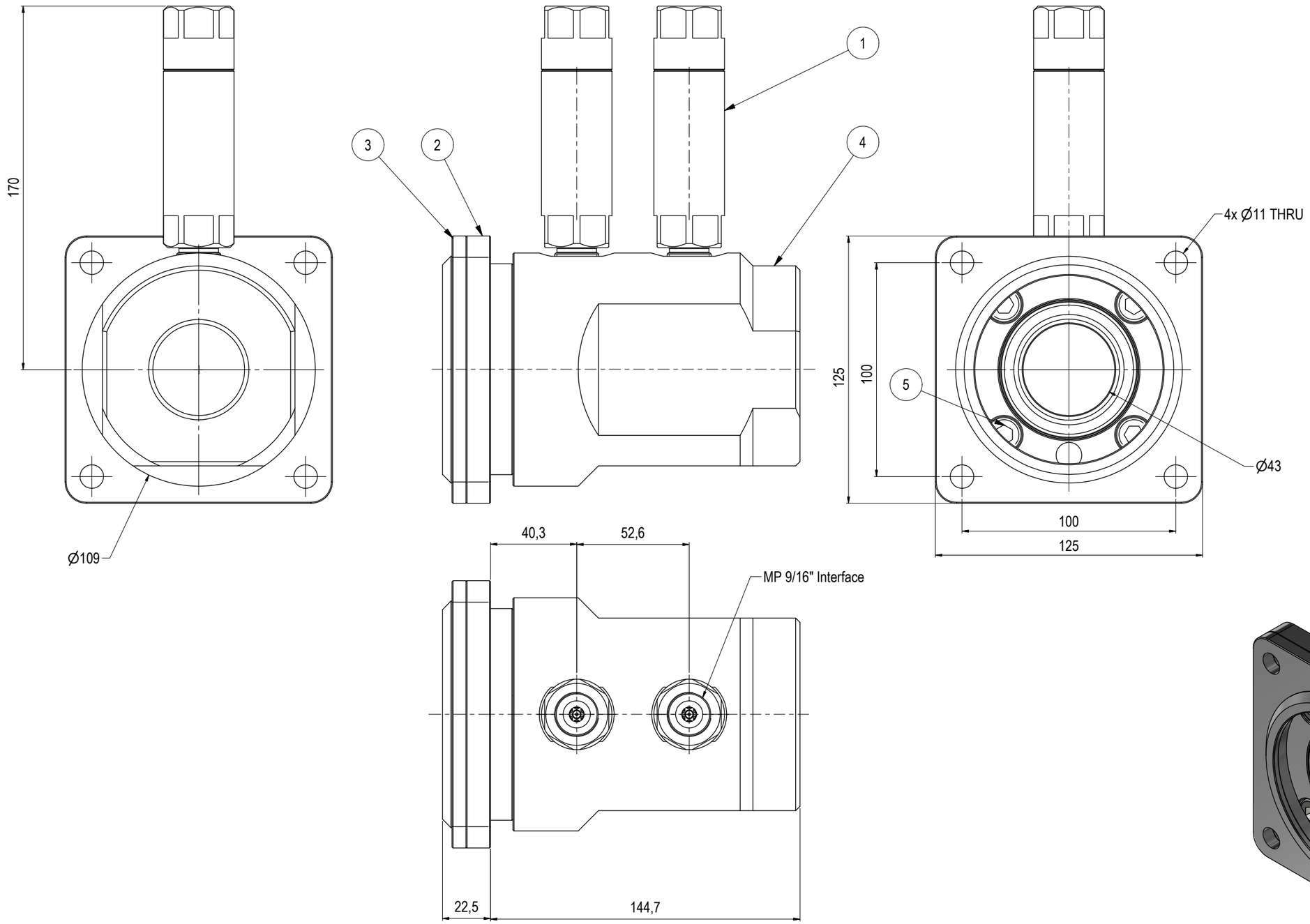

NOTE: 1
STANDARDS:
API 17H Type 1
API 6A

NOTE: 2
INTERFACE INFORMATION:

Hydraulic:	MP 9/16"
Mechanical:	4x Ø11
Electrical:	N/A
Data Com.:	N/A

NOTE: 4
PROPERTIES:

Material Class:	N/A
Temperature Class:	N/A
Rated Work Press Bar:	1380
Test Pressure:	N/A
Specification Level:	N/A
Flow Rate:	N/A
Qualification:	N/A
Application:	N/A
Load Rating:	N/A
Torque Rating:	N/A
Design Water Depth:	3000m
Weight in Air:	10,5 kg
Volume:	1,34 dm^3
Submerged Weight:	9,11 kg

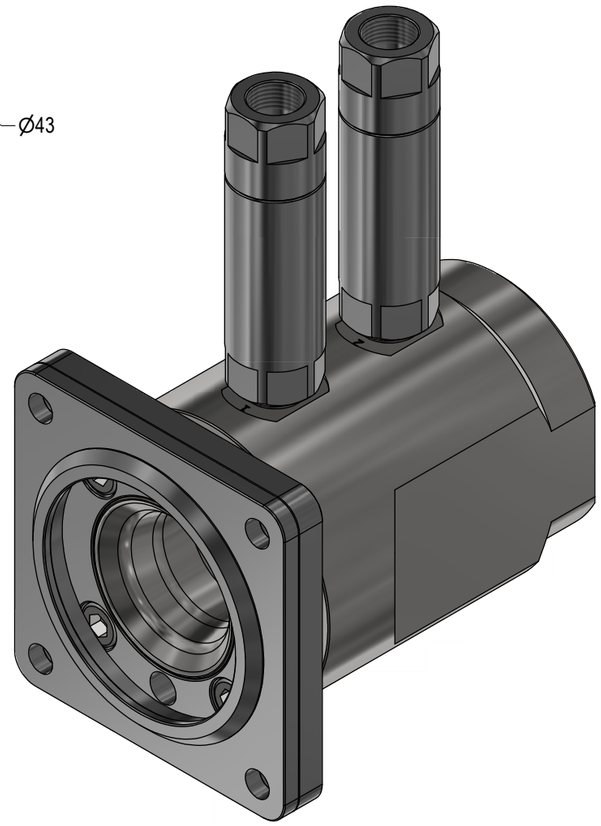

Rev.	Date	Reason for issue	Revision change	Made	Chk'd	Appr.
01	4.2.2025	9-IFU (Issued for Use)		HNJ	TAN	HNJ

BLUE LOGIC

This Drawing is the Property of Blue Logic AS © and must Not be Loaned, Reproduced or Transferred to others without written Permission

Dwg Scale: NTS
Dwg Proj:
Dwg Format: A3

Drawing title: Ø43 DP Rec 20k Long-term WL wCV MP 9/16"

Drawing number: BC2400

Rev. 01